YOUR
SMART
ENERGY

AlphaESS

STORION-LC-TB250/TB500
STORION-LC-T250/T500

1000V Liquid-Cooling System
10ft AC Container + Storion-LC235 Battery Cabinet

CAPACITY

Battery Cabinet: 235 kWh

DC Coupling： 250 kW&500 kW / Max.2351 kWh

AC Coupling： 250 kW&500 kW / Max.2351 kWh

+

Easily Installation

Seamless Switching (<20ms)

Easily Set Function Parameters

Intelligent liquid cooling temperature control

Various Operating Modes Available For Selection

STORION-LC-TB250/TB500
STORION-LC-T250/T500

AlphaESS

Model	STORION-LC-T250/T500	STORION-LC-TB250/TB500
DC Parameters		
Nominal Capacity	Max.2351.2 kWh	Max.2351.2 kWh
Battery Cluster Connection	Max. 10 Battery Cabinets in Parallel	
Rated Voltage	748.8 VDC	
Working Voltage Range	631.8~842.4 VDC	
Battery Chemistry	LFP ($LiFePO_4$)	
Battery Cooling Type	Liquid Cooling	
HV DC bus voltage	LV voltage+40V ~ 900V	/
LV PV input voltage	250~800V	/
Max. PV Power	2*400kW	/
AC Parameters		
Rated Charging and Discharging Power	250/500 kW	250/500 kW
AC Current	380A	380A/760A
AC Frequency	50Hz/60Hz (±2.5Hz)	
On-grid/off-grid switch time	/	<20ms
Rated Grid voltage	400VAC(±15%)	
Physical Parameters		
Dimensions (W x D x H)	Container: 2991 X 2438 X 2591 mm Cabinet: 1050 X 1500 X 2450 mm	
Ingress Protection	Container: IP54 Cabinet: IP55	
Product Type	Outdoor	
Fire-Fighting System	Aerosol	
System Weight	6.5+n* X 2.8 t	6+n* X 2.8 t
Operating Temperature Range	-30 °C ~ 50 °C**	
Battery Cabinet Parameters [Storion-LC235]		
Battery Configuration	1P234S	
Rated Voltage	748.8 VDC	
Nominal Capacity	235.1 kWh	
Rated Charging and Discharging Power	117.5 kW (0.5 P)	
Ingress Protection	IP55	
Weight	2.8 t	
Dimensions (W x D x H)	1003 x 1500 x 2482 mm	
Certification		
Safety	UN38.3, IEC 62619, IEC 62477, IEC 61000, UL9540A	

*The "n" represents the number of battery cabinets
**The optimum temperature range is 15~35℃.If the ambient temperature is too high or too low, the battery performance may deteriorate.
AC coupling supports parallel operation of four systems, while DC coupling does not support parallel operation

STORION-LC-TB250/TB500
STORION-LC-T250/T500

TOPOLOGY DIAGRAM

DC-Coupling Solution

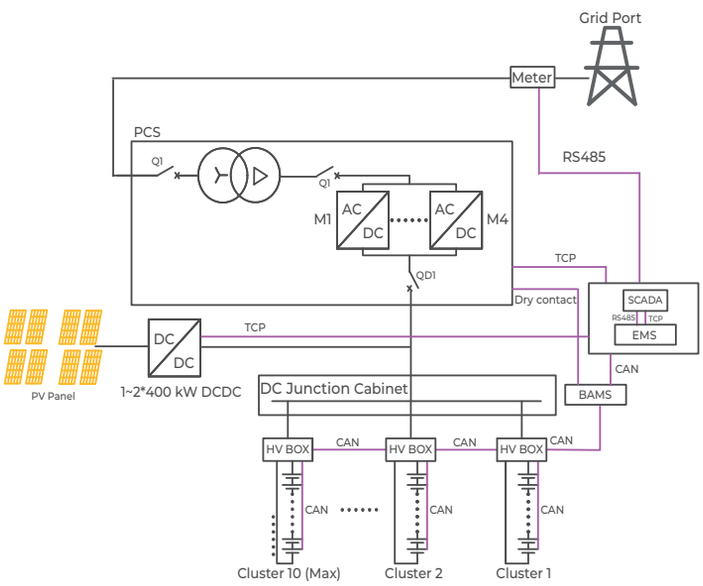

AC-Coupling Solution

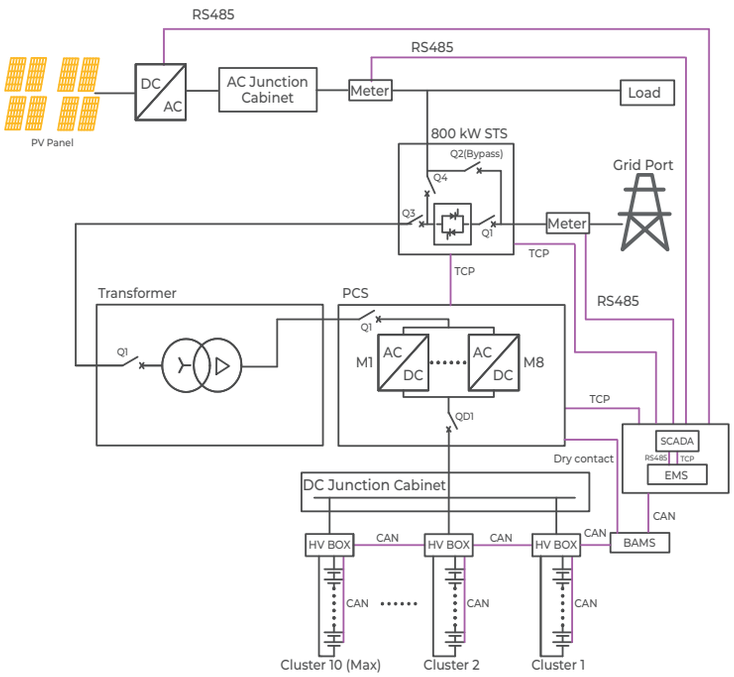

DC-Coupling

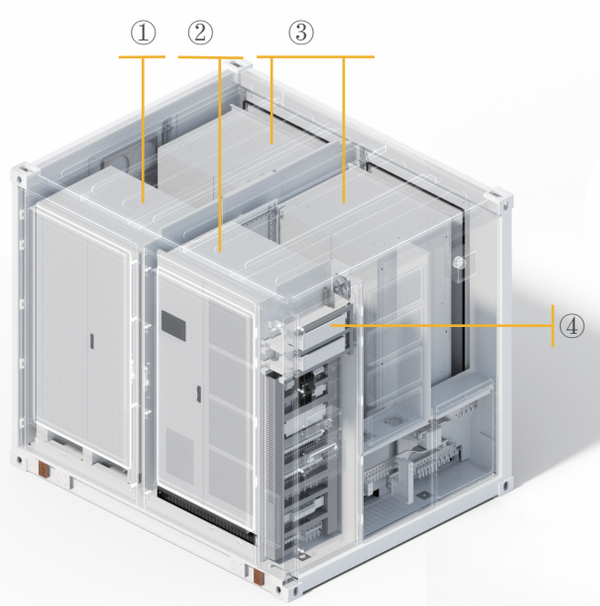

AC-Coupling

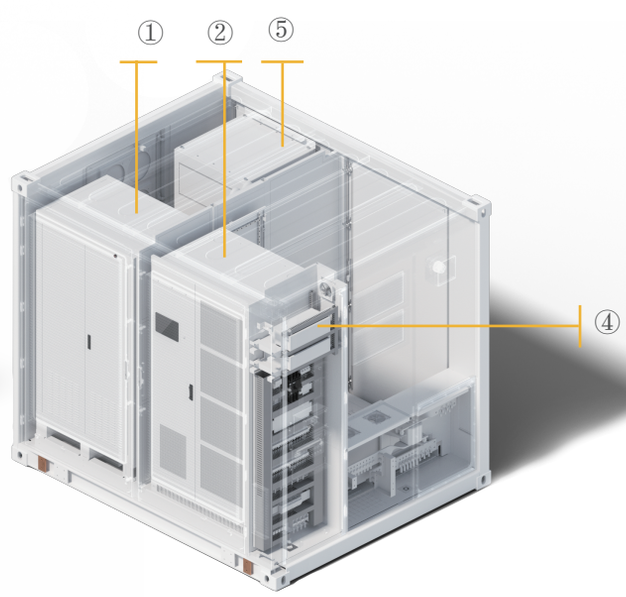

①: Transformer ②: PCS ③: DCDC ④: EMS ⑤: STS

Equipment Parameter

AlphaESS

PCS		
Model	PWS1-250KTL-EX	PWS1-500KTL-EX
Battery Voltage Range	600 ~ 900 V	600 ~ 900 V
Max. Charging / Discharging Current	440 ADC	880ADC
Nominal Power	250 kW	500 kW
Rated Voltage	400 V	
Grid Voltage Range	400(-15%~15%)VAC	
Power Factor Range	0.99 / -1 ~ 1	
Rated Output Frequency	50/60(-2.5~2.5) Hz	
Dimensions (W×D×H)	1100×800×2160 mm	
Certification	CE LVD IEC 62477, CE EMC IEC 61000, EN 50549-1:2019, G99, AS4777	

Transformer	
Model	WT500K
Rated Capacity	500kVA
Input Voltage	380V
Output Voltage	400V
Group of Connections	Dyn11
Insulation Class	H
Full-Load Efficiency	≥97%
Weight	1300 kg
Dimension (W×D×H)	1100×800×2050 mm

STS	
Model	PWD_800K
Rated Capacity	800 kW
Rated Voltage	400 V
Input Voltage Range	-15% ~ 15%
Output Voltage Range	-15% ~ 15%
Nominal Current	1154 A
AC Frequency	50Hz / 60Hz±2.5Hz
Switching Time Gap	≤20 ms
Ingress Protection	IP20
Wiring Mode	Three Phase, 4 Wires
Max. Efficiency	99.5% (Full Load)
Cooling Method	Forced Air Cooling
Dimensions (W×H×L)	800×800×2160 mm
Weight	450 kg

Equipment Parameter

DCDC	
Model	**PDS1_400K**
HV DC Bus Voltage	LV voltage+40V ~ 900
HV DC Bus Current	0~130A×8
LV PV Input Voltage/Battery Voltage	250~800V
LV PV Input Current/Battery Current	0~130A×8
Power Rating	50kW×8
Ingress Protection	IP20
Weight	Cabinet 280kg + Module 40kg*n (n=1,2,...,8)
Dimension (W×H×L)	1100×2160×800 mm
Altitude	3000 m

The PV inverter in the AC coupling solution can be purchased by the customer or from AlphaESS

Alpha ESS Co., Ltd.
+86 513 8060 6891
info@alpha-ess.com
www.alphaess.com
No. 1086 Bihua Road, Tongzhou District, Nantong City, Jiangsu Province, China

Alpha ESS International Pte. Ltd.
+65 6513 1125 / +65 6513 1126
Singapore@alpha-ess.com
2 Corporation Road #01-06A Corporation Place 618494 Singapore

Alpha ESS USA, Inc.
inquiry@alphaess.us
www.alphaess.us
2180 S Ivanhoe St. Unit 5 Denver.CO 80222 USA

Alpha ESS South Africa (Pty.) Ltd.
measervice@alpha-ess.com
Johannesburg, South Africa

V00.09062025 | Text and images correspond to the current state of technology at the time of printing. Subject to modifications. All information is without guarantee in spite of careful editing - liability excluded.